CARTEN-Fujikin Inc.
High Performance Valves & Process Flow Solutions

# SPDSA SERIES

## Ultra-High Purity Bar Stock Stainless Steel Air-Actuated Diaphragm Valves

# SPDSA SERIES

## SPDSA Series Product Applications

This SPDSA (Diapgragm Design) is intended for bulk gas distribution where containment, cleanliness and purity are of the utmost importance.

Applications for this valve include:

- High-purity gas system control valves
- High-purity gas control for point-of-use service
- Superior containment and cleanliness for your most critical valve applications
- Suitable for inert and most toxic gases
- Valve manifold boxes and valve manifold panels

## SPDSA Series Product Features

- High Cv Actuated Diaphragm Valve, Compact Round Body Design
- Ultra-High Purity Bar Stock Stainless Steel/PCTFE/Vespel® Valve Construction
- **Elgiloy® Tied-Diaphragm for Maximum Flow on Valve Sizes – .500" and 1.00" Only
- Springless, Packless Design – Low Dead Volume / Internal Flowpath
- 10 Ra Max – Electropolished Surface Finish – Std (Optional Surface Finishes Available)
- Purge Connections and Purge Valves are Integrated in Valve Body
- Valve Body and Tube Stubs are Serialized for Material Certification

## SPDSA Construction Materials

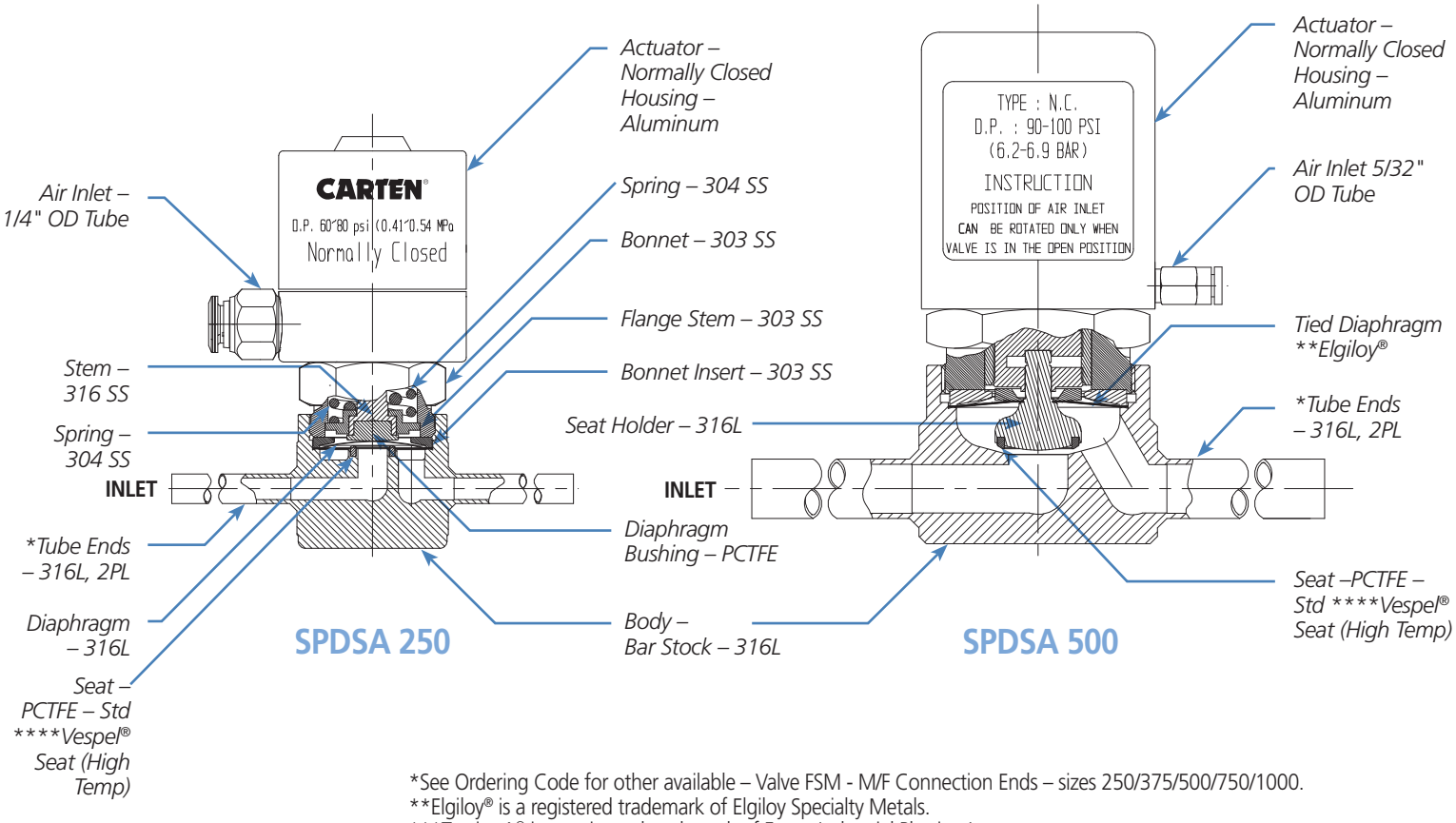


*See Ordering Code for other available – Valve FSM - M/F Connection Ends – sizes 250/375/500/750/1000.
**Elgiloy® is a registered trademark of Elgiloy Specialty Metals.
***Turcite-A® is a registered trademark of Emoo Industrial Plastics, Inc.
****Vespel® is a registered trademark of DuPont Company.

## SPDSA Series Technical Data

| | | | |
|---|---|---|---|
| MATERIAL OF CONSTRUCTION | Wetted Areas | ***Elgiloy®, 316L Stainless Steel, PCTFE, Nickel Alloy | |
| | Non-Wetted Areas | 316L Stainless Steel, 303 Stainless Steel | |
| MAXIMUM OPERATING PRESSURE | SPDSA 250 & 375 & 525 | Vacuum to 250 psig (0-17.2 bar) | 60-80 psig (4.1 - 5.5 bar) - Actuator - N.C. |
| | SPDSA 500 & 755 | | 90-100 psig (6.2 - 6.9 bar) - Actuator - N.C. |
| | SPDSA 500 & 755 | | 60-100 psig (4.5 - 6.9 bar) - Actuator - N.O.-I.D. |
| | | | |
| | *SPDSA 751-TE & 1000 & 1501 | | 80-100 psig (5.5 - 6.9 bar) - Actuator - N.O.-I.D. |
| | SPDSA 751-TE & 1000 & 1501 | | 90-100 psig (6.2 - 6.9 bar) - Actuator - N.C.- I.D. |
| MAXIMUM OPERATING TEMPERATURE | PCTFE Seat – Std<br>**Vespel® Seat (High Temp) | -22ºF (-30ºC) to 180ºF (82ºC)<br>181ºF (83ºC) to 302ºF (150ºC) | |
| INTERNAL VOLUME | SPDSA 250 | 0.124 $in^3$ (2.032 $cm^3$) | |
| | SPDSA 375 & 525 | 0.177 $in^3$ (2.901 $cm^3$) | |
| | SPDSA 500 & 755 | 0.816 $in^3$ (13.374 $cm^3$) | |
| | SPDSA 751-TE & 1000 & 1501 | 1.881 $in^3$ (30.824 $cm^3$) | |

*SPDSA 751-TE & 1000 & 1501 N.O.-I.D. PRESSURE RATING is 150 psig. **Vespel® is a registered trademark of DuPont Company.
***Elgiloy® is a registered trademark of Elgiloy Specialty Metals.

| VALVE MODELS | BODY DATA | FLOW COEFFICIENT | CYCLE LIFE |
|---|---|---|---|
| Series/Size-Inch | Tube/Body (Seat-Orifice) Sizes | $C_V$ | @250 PSIG |
| SPDSA 250-NC | Ø.250 / .250 (Ø.250 in. (Ø6.35mm)-Orifice) | 0.41 | 200,000 |
| SPDSA 375-NC | Ø.375 / .250 (Ø.250 in. (Ø6.35mm)-Orifice) | 0.64 | |
| SPDSA 525-NC | Ø.500 / .250 (Ø.250 in. (Ø6.35mm)-Orifice) | 0.68 | |
| SPDSA 500-NC | Ø.500 / .500 (Ø.500 in. (Ø12.7mm)-Orifice) | 2.01 | 50,000 |
| SPDSA 500-NO-ID | Ø.500 / .500 (Ø.500 in. (Ø12.7mm)-Orifice) | 2.50 | 100,000 |
| SPDSA 755-NC | Ø.750 / .500 (Ø.500 in. (Ø12.7mm)-Orifice) | 2.03 | 50,000 |
| SPDSA 755-NO-ID | Ø.750 / .500 (Ø.500 in. (Ø12.7mm)-Orifice) | 2.60 | 100,000 |
| SPDSA 751-TE-NC-ID / NO-ID | Ø.750 / 1.000 (Ø1.06 in. (Ø27.0mm)-Orifice) | 4.49 | 50,000 |
| SPDSA 1000-NC-ID / NO-ID | Ø1.000 / 1.000 (Ø1.06 in. (Ø27.0mm)-Orifice) | 5.50 | 50,000 |
| SPDSA 1501-NC-ID / NO-ID | Ø1.500 / 1.000 (Ø1.06 in. (Ø27.0mm)-Orifice) | 5.33 | 50,000 |

| | | |
|---|---|---|
| HELIUM LEAK TEST | Inboard<br>Across the Seat<br>Outboard Pressure Test | $\leq 1 \times 10^{-9}$ std.cc (atm) He / sec<br>$\leq 1 \times 10^{-9}$ std.cc (atm) He / sec<br>$\leq 1 \times 10^{-6}$ std.cc (atm) He / sec |
| CLEANLINESS AND PACKAGING | Assembled and tested in Class 100 Cleanroom. Purged and Final Packaged in Class 1 Cleanroom. Double-bag Packaging (2 mil nylon inner bag, 6 mil polyethylene outer bag) with Ultra-High Purity $N_2$ gas environment. | |
| STANDARD FINISH | 10 Ra Max – Electropolished Surface Finish – Std (Optional surface finishes available) | |
| NOTES AND OPTIONS | Testing: Particle, Moisture, $O_2$, SEM, ESCA, and AES<br>Purge Connection – Valve Type/Location Size .250<br>Valve Connection Ends – Inlet/Outlet Sizes .250 to 1.000<br>Valve Body Mounting Holes Std. Options:<br>1) SPDS 250 to 750 – M5 x 0.8 or 10-32UNC-2B<br>2) SPDS 1000 – .250-20UNC-2B<br>Pneumatic Repair Kits Available for All Sizes | |

Specifications are subject to change without notice.

# SPDSA SERIES

## SPDSA Series Technical Dimensions

| SERIES/SIZE (INCH) | A | B | C | D | E | F | G | H | J | K |
|---|---|---|---|---|---|---|---|---|---|---|
| SPDSA 250-NC | Ø .250 (6.4mm) | 0.035 (0.89mm) | 0.50 (12.7mm) | 3.04 (77.2mm) | 7.35 (186.7mm) | 3.46 (87.9mm) | Ø 1.57 (39.9mm) | 1.98 (50.3mm) | 2.55 (64.8mm) | 5.10 (129.5mm) |
| SPDSA 375-NC | Ø .375 (9.5mm) | 0.035 (0.89mm) | 0.50 (12.7mm) | 3.04 (77.2mm) | 7.35 (186.7mm) | 3.46 (87.9mm) | Ø 1.57 (39.9mm) | 1.98 (50.3mm) | 2.55 (64.8mm) | 5.10 (129.5mm) |
| SPDSA 525-NC | Ø .500 (12.7mm) | 0.049 (1.2mm) | 0.50 (12.7mm) | 3.04 (77.2mm) | 7.35 (186.7mm) | 3.46 (87.9mm) | Ø 1.57 (39.9mm) | 1.98 (50.3mm) | 2.55 (64.8mm) | 5.10 (129.5mm) |
| | | | | | | | | | | |
| SPDSA 500-NC | Ø .500 (12.7mm) | 0.049 (1.2mm) | 0.46 (11.7mm) | 3.04 (77.2mm) | 8.08 (205.2mm) | 4.29 (109.0mm) | Ø 1.96 (49.8mm) | 2.05 (52.1mm) | 2.63 (66.8mm) | 3.71 (94.2mm) |
| SPDSA 500-NO-ID | Ø .500 (12.7mm) | 0.049 (1.2mm) | 0.46 (11.7mm) | 3.04 (77.2mm) | 8.08 (205.2mm) | 3.31 (84.1mm) | Ø 3.33 (84.6mm) | 2.05 (52.1mm) | 2.63 (66.8mm) | 3.71 (94.2mm) |
| SPDSA 755-NC | Ø .750 (19.1mm) | 0.065 (1.65mm) | 0.46 (11.7mm) | 3.04 (77.2mm) | 8.08 (205.2mm) | 4.29 (109.0mm) | Ø 1.96 (49.8mm) | 2.05 (52.1mm) | 2.63 (66.8mm) | 3.71 (94.2mm) |
| SPDSA 755-NO-ID | Ø .750 (19.1mm) | 0.065 (1.65mm) | 0.46 (11.7mm) | 3.04 (77.2mm) | 8.08 (205.2mm) | 3.31 (84.1mm) | Ø 3.33 (84.6mm) | 2.05 (52.1mm) | 2.63 (66.8mm) | 3.71 (94.2mm) |
| | | | | | | | | | | |
| SPDSA 751-TE-NC-ID | Ø .750 (19.1mm) | 0.065 (1.65mm) | 0.75 (19.1mm) | 3.06 (77.7mm) | 10.79 (274.1mm) | 5.68 (144.3mm) | Ø 3.33 (84.6mm) | 1.26 (32.0mm) | 1.83 (46.5mm) | |
| SPDSA 751-TE-NO-ID | Ø .750 (19.1mm) | 0.065 (1.65mm) | 0.75 (19.1mm) | 3.06 (77.7mm) | 10.79 (274.1mm) | 4.54 (115.3mm) | Ø 3.33 (84.6mm) | 1.26 (32.0mm) | 1.83 (46.5mm) | |
| SPDSA 1000-NC-ID | Ø 1.000 (25.4mm) | 0.065 (1.65mm) | 0.75 (19.1mm) | 3.06 (77.7mm) | 10.79 (274.1mm) | 5.68 (144.3mm) | Ø 3.33 (84.6mm) | 1.26 (32.0mm) | 1.83 (46.5mm) | |
| SPDSA 1000-NO-ID | Ø 1.000 (25.4mm) | 0.065 (1.65mm) | 0.75 (19.1mm) | 3.06 (77.7mm) | 10.79 (274.1mm) | 4.54 (115.3mm) | Ø 3.33 (84.6mm) | 1.26 (32.0mm) | 1.83 (46.5mm) | |
| SPDSA 1501-NO-ID | Ø 1.500 (38.1mm) | 0.065 (1.65mm) | 0.75 (19.1mm) | 5.00 (127.0mm) | 13.65 (346.7mm) | 5.68 (144.3mm) | Ø 3.33 (84.6mm) | 1.26 (32.0mm) | 1.83 (46.5mm) | |
| SPDSA 1501-NC-ID | Ø 1.500 (38.1mm) | 0.065 (1.65mm) | 0.75 (19.1mm) | 5.00 (127.0mm) | 13.65 (346.7mm) | 4.54 (115.3mm) | Ø 3.33 (84.6mm) | 1.26 (32.0mm) | 1.83 (46.5mm) | |

NOTE 1: All tolerances are ±0.06 in. (±1.52mm) unless otherwise stated.
NOTE 2: Dimensional drawings shown are for reference only. Please contact CARTEN® for customer drawings.

# SPDSA SERIES

## SPDSA Series Typical Valve Dimensions

### SPDSA 250 BODY (N.C. SHOWN)
250 / 375 / 525 - N.C.

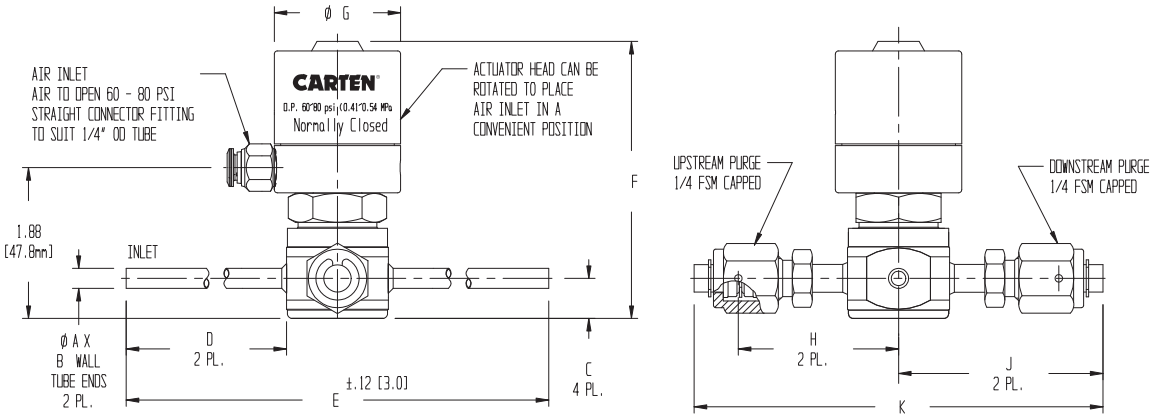


### SPDSA 500 BODY (N.C. SHOWN)
500 / 755 - N.C. / N.O.-ID

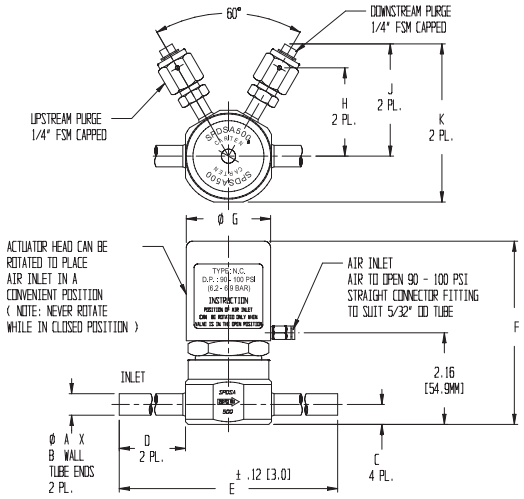


### SPDSA 500 BODY (N.O.-ID SHOWN)
500 / 755 - N.C. / N.O.-ID

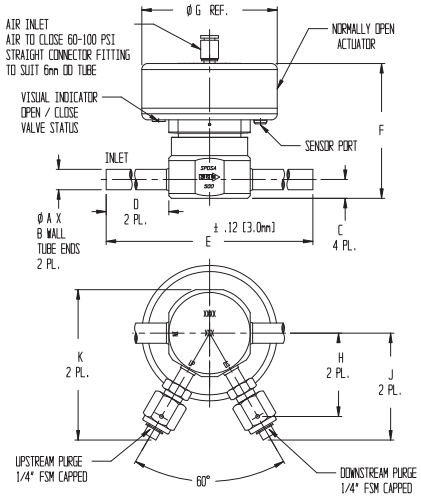


### SPDSA 1000 BODY (N.C.-ID SHOWN)
751-TE / 1000 / 1501 - N.C.-ID / N.O.-ID

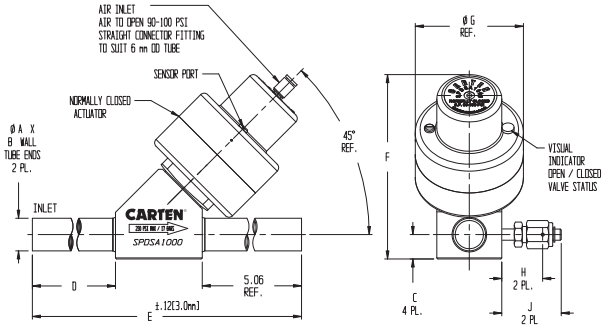


### SPDSA 1000 BODY (N.O.-ID SHOWN)
751-TE / 1000 / 1501 - N.C.-ID / N.O.-ID

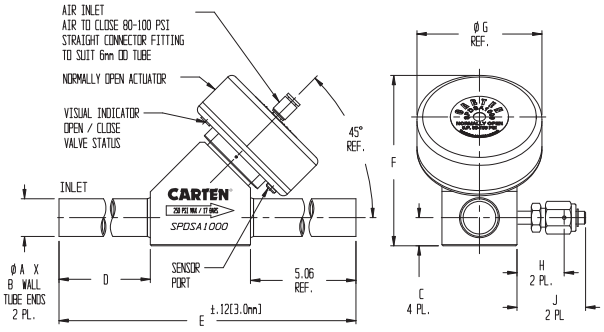

# SPDSA SERIES

## SPDSA Series Ordering Code

**SPDSA – 500 – 10 – PC2 – FSM-MR – NC**

| SERIES | TYPE |
|---|---|
| SPDSA | Pneumatic |

| VALVE SIZES | TUBE/(BODY) INCH – SIZES | |
|---|---|---|
| 250 | Ø .250 | .250 |
| 375 | Ø .375 | |
| 525 | Ø .500 | |
| 500 | Ø .500 | .500 |
| 755 | Ø .750 | |
| 751-TE | Ø .750 | 1.000 |
| 1000 | Ø 1.000 | |
| 1501 | Ø 1.500 | |

| CODE | SURFACE FINISH |
|---|---|
| 10 | 10 Ra Max - Std EP |
| 5 | 5 Ra Max - EP |

| CODE | TYPE |
|---|---|
| FSM-MR | Fixed Male-RH |

FSM – Face Seal Metal Purge (Right Hand)

| CODE | SIZE/LOCATION | TYPE |
|---|---|---|
| LV | Not Required | None |
| PC1 | 1/4" Downstream | Purge |
| PC2 | 1/4" Up & Downstream | Purge |
| PC3 | 1/4" Upstream | Purge |
| PV1 | 1/4" Downstream | Valve |
| PV2 | 1/4" Up & Downstream | Valve |
| PV3 | 1/4" Upstream | Valve |

| CODE | OPTIONS |
|---|---|
| Pneumatics | |
| NC | Normally Closed |
| NC-ID | NC w/ ID |
| NO | Normally Open |
| NO-ID | NO w/ ID |
| | |
| V | *Vespel® Seat |

*Vespel® is a registered trademark of DuPont Company.

**OPTIONAL VALVE FSM - M/F CONNECTION ENDS**
Available on SPDSA .250" to 1.000" Body Sizes

CONNECTION END SIZES
.250 / .375 / .500 / .750 / 1.000

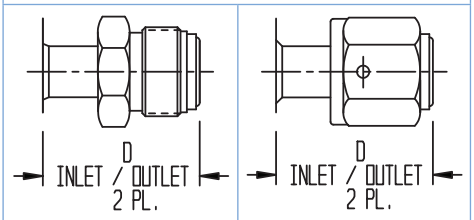


| FSM-M-2X | FSM-F-3X |
|---|---|

| Connection Size | Dimension "D" FSM-M-2X | Dimension "D" FSM-F-3X |
|---|---|---|
| .250 | 1.32 (33.5mm) | 1.32 (33.5mm) |
| .375 / .500 | 1.54 (39.1mm) | 1.54 (39.1mm) |
| .750 | 2.06 (52.3mm) | 2.06 (52.3mm) |
| 1.000 | 2.38 (60.5mm) | 2.38 (60.5mm) |

Safe Product Selection
When selecting a product, the total system design must be considered to ensure safe, trouble-free performance. Function, material compatibility, adequate ratings, proper installation, operation, and maintenance are the responsibilities of the system designer and user.

**Carten Fujikin, Inc.**
604 West Johnson Avenue
Cheshire, Connecticut CT 06410 USA

Tel: +1 203-699-2100
Fax: +1 203-699-2179
Email: sales@cartenus.com
Website: www.cartenus.com

REV 4/2019

CARTEN®
High Performance Valves & Process Flow Solutions

**Carten Controls, Ltd.**
Unit 609, Waterford Industrial Park
Waterford, X91 AX05 Ireland

Tel: +353 (0)51 355436
Fax: +353 (0)51 378054
Email: sales@cartencontrols.com
Website: www.cartencontrols.com

Carten Controls is a member of Fujikin Corp Group (FCG) with Headquarters in Osaka, Japan.